AMERICAN SPECIALTIES, INC. *441 Saw Mill River Road, Yonkers, NY 10701 (914) 476-9000*	MODEL No:	0264-12
	ISSUED:	1-87
	REVISED:	8-04

SURFACE MOUNTED DOUBLE ROLL TOILET TISSUE HOLDER

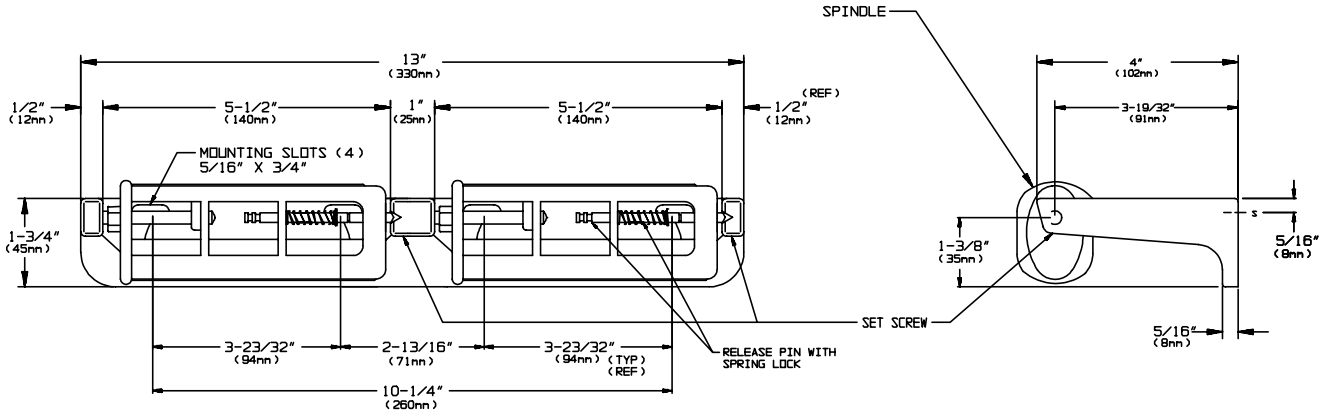

ELEVATION SIDE VIEW

SPECIFICATION

Surface Mounted, theft resistant, key locked, Double Roll Toilet Tissue Holder with controlled-delivery spindles, shall hold and dispense all standard core roll tissue, up to 6" (152 mm) in diameter and be fabricated of Cast Aluminum with a satin matte silver-gray finish. The “no waste” rocking action spindle shall be fabricated of impact resistant, ABS thermoplastic and be tamper resistant with a concealed release mechanism and locking screw that shall be removable only with a hex key. Spindle shall rotate 1/2 revolution for each operation and return to its original position. Roll cannot be removed from spindle until completely exhausted

Surface Mounted Single Roll Toilet Tissue Holder with theft resistant, controlled-delivery spindle shall be Model № 0264-12 of American Specialties, Inc. 441 Saw Mill River Road Yonkers, New York 10701-4913

INSTALLATION

Unit is surface mounted on wall or partition using №10 self tapping screws (by others). For compliance with ADA Accessibility Guidelines, unit should be installed so that tissue roll centerline is between 44" (1118mm) maximum above finished floor (AFF) and 19″ (483mm) minimum AFF.

OPERATION

Spindles revolve 1/2 revolution for each operation and then return to their original position and operate independently. Roll core prevents access to release pin and cannot be removed from spindle until exhausted and screw is loosened with key. Unit is replenished by releasing a concealed pin which in turn releases a spring lock mechanism on spindle.