BOBRICK

Technical Data

LAVATORY-MOUNTED SOAP DISPENSER

B-8221

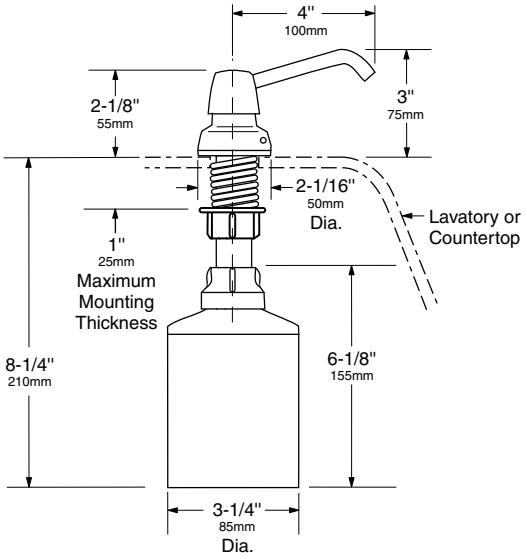

MATERIALS:

Piston, Spout, and Top Cover — Type-304 stainless steel with bright polished finish.

Cover Spacer — Rigid, impact-resistant polyester.

Escutcheon — Chrome-plated, high-impact-resistant ABS with bright polished finish. Concealed locking mechanism.

Body and Shank — High-impact-resistant plastic.

Valve — ABS cylinder. Stainless steel spring. U-packing seal and duckbills.

Container — Translucent, shatter-resistant polyethylene. Capacity: 20-fl oz (0.6-L).

OPERATION:

Press piston down to dispense commercially marketed all purpose hand soaps. Vandal-resistant spout can rotate 360° without damage to unit. Escutcheon locks to body with concealed locking mechanism that is opened with special key provided. To fill from top, unlock cover and remove piston, spout, and supply-tube assembly. Unit may also be filled by removing container from below lavatory.

Designer's Note: Bobrick liquid soap dispensers are designed to dispense commercially marketed all purpose hand soaps including liquid and lotion soaps, synthetic detergents, non-iodine based soaps and do not use alcohol based sensitizers.

INSTALLATION:

Unit is designed for installation in 1" (25mm) diameter hole in porcelain-enameled steel, cast-iron or vitreous-china lavatories, as well as in countertops adjacent to lavatories. Unit may be mounted in unused faucet hole or through special hole requisitioned when lavatory is ordered from manufacturer (specify punching location). Shank accommodates maximum 1" (25mm) mounting thickness and can be cut in the field. Clearance required for container diameter is 3-5/16" (85mm).

SPECIFICATION:

Lavatory-mounted soap dispenser shall dispense commercially marketed all purpose hand soaps. Piston and spout assembly shall be Type-304 stainless steel with bright polished finish. Escutcheon shall lock to body with concealed locking mechanism that is opened only with special key provided. Spout shall rotate 360° without damage to valve mechanism. Piston, spout, and supply-tube assembly shall be removable from top for filling and maintenance. Valve shall be equipped with plastic cylinder, stainless steel spring, U-packing seal, and duckbills. Shank shall accommodate mounting thicknesses up to 1" (25mm). Translucent, shatter-resistant polyethylene container shall have a capacity of 20-fl oz (0.6-L).

Lavatory-Mounted Soap Dispenser shall be Model B-82216 of Bobrick Washroom Equipment, Inc., Clifton Park, New York; Jackson, Tennessee; Los Angeles, California; Bobrick Washroom Equipment Company, Scarborough, Ontario; Bobrick Washroom Equipment Pty. Ltd., Australia; and Bobrick Washroom Equipment Limited, United Kingdom.

The illustrations and descriptions herein are applicable to production as of the date of this Technical Data Sheet.
The manufacturer reserves the right to, and does from time to time, make changes and improvements in designs and dimensions.

Revised 12/22/16R/B, S/H Printed in U.S.A.
© 2016 by Bobrick Washroom Equipment, Inc.